AHP-2252 | Air Conditioner/Heat Exchanger

Air Cooled
Through Mounted
Nema-12, 4, 4X

240 VAC Input
High Capacity
2060 BTU/HR



FEATURES

- High capacity thermoelectric design
- Power saving air to air heat exchanger mode (ECO-Mode)
- Heavy duty full perimeter mounting
- Lower profile intrusion into enclosure
- Central input cord for easy mounting
- Closed loop design
- Condensate control and evaporation system
- Increased efficiency at higher ambients by as much as 10%
- Virtually maintenance free
- No compressor
- Environmentally friendly and safe
- Stainless Steel exterior housing
- Mounts and operates in any orientation
- Integral temperature controller
- Agency approvals:
- UL 60335-1 & 2-40; CSA C22.2#60335-1 & 2-40; IEC 60335-1 & 2-40

CONTROL TEMPERATURES

Active Cooling	35 °C
Heat Exchanger (ECO-Mode)	25 °C
Active Heating	10 °C
Typical Hysteresis	5 °C
Operating Ambient	-40/+65 °C
Operating Enclosure	-10/+60 °C

POWER INPUTS

Voltage	240 VAC
Current, Nominal Cool Mode	6.5 AMPS
Circuit Breaker, Cool Mode Max. Current,	10 AMPS
Nominal Heat Mode	7.5 AMPS
Circuit Breaker, Heat Mode Max. Current ,	15 AMPS
ECO-Mode	0.5 AMPS
Frequency	50/60 Hz

PERFORMANCE RATINGS

Cooling (Traditional)	2060 BTU/HR
Cooling (Din 3168)	605 WATTS
Cooling COP (at L35 L35)	0.4
Heating (Traditional)	> 5320 BTU/HR
Heating (Din 3168)	> 1560 WATTS
Heating COP	> 1.0
Heat Exchanger (ECO-Mode)	12.5 W/°C

INCLUDES

- Power supply
- Temperature controller
- Power saving heat exchanger mode (ECO-Mode)
- Mounting gasket
- Mounting hardware
- Power input cord
- Circuit breaker

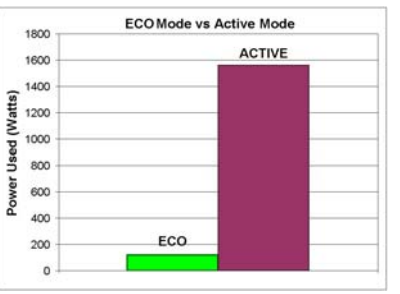

250 VDC configuration for crane applications available

CONFIGURATIONS

MODEL	PART NUMBER	NOTES	TEMPERATURE CONTROL	ENVIRONMENT
AHP-2252	0-H5J2-0-000	Cool only, industrial fans & power supply	TC-4F	NEMA-12, IP 52
AHP-2252	0-H552-0-000	Cool only, industrial fans & power supply	EXT*	NEMA-12, IP 52
AHP-2252HC	0-H5I2-1-000	Heat/Cool, industrial fans & power supply	TC-7F	NEMA-12, IP 52
AHP-2252HC	0-H552-1-000	Heat/Cool, industrial fans & power supply	EXT*	NEMA-12, IP 52
AHP-2252XE	0-H5J2-4-000	Cool only, sealed hot side fans & power supply	TC-4F	NEMA-4/4X, IP 56
AHP-2252XE	0-H552-4-000	Cool only, sealed hot side fans & power supply	EXT*	NEMA-4/4X, IP 56
AHP-2252XEHC	0-H5I2-5-000	Heat/Cool, sealed hot side fans & power supply	TC-7F	NEMA-4/4X, IP 56
AHP-2252XEHC	0-H552-5-000	Heat/Cool, sealed hot side fans & power supply	EXT*	NEMA-4/4X, IP 56
AHP-2252X	0-H5J2-2-000	Cool only, Mil. grade hot side fans & power supply	TC-4F	NEMA-4X/Harsh, IP 56
AHP-2252X	0-H552-2-000	Cool only, Mil. grade hot side fans & power supply	EXT*	NEMA-4X/Harsh, IP 56
AHP-2252XHC	0-H5I2-3-000	Heat/Cool, Mil. grade hot side fans & power supply	TC-7F	NEMA-4X/Harsh, IP 56
AHP-2252XHC	0-H552-3-000	Heat/Cool, Mil. grade hot side fans & power supply	EXT*	NEMA-4X/Harsh, IP 56

* Unit is set for 5-32 VDC external signal, relay(s) included

AHP-2252

MOUNTING STYLE

Through Mounted

ENVIRONMENTS SERVED

NEMA-12 IP 52

NEMA-4,4X IP 56

RATING (TRADITIONAL)

2060 BTU/hr @ 0 °F ΔT

2680 BTU/hr @ +20 °F ΔT

RATING (DIN 3168)

605 Watts L35 L35

395 Watts L35 L50

PERFORMANCE CURVE

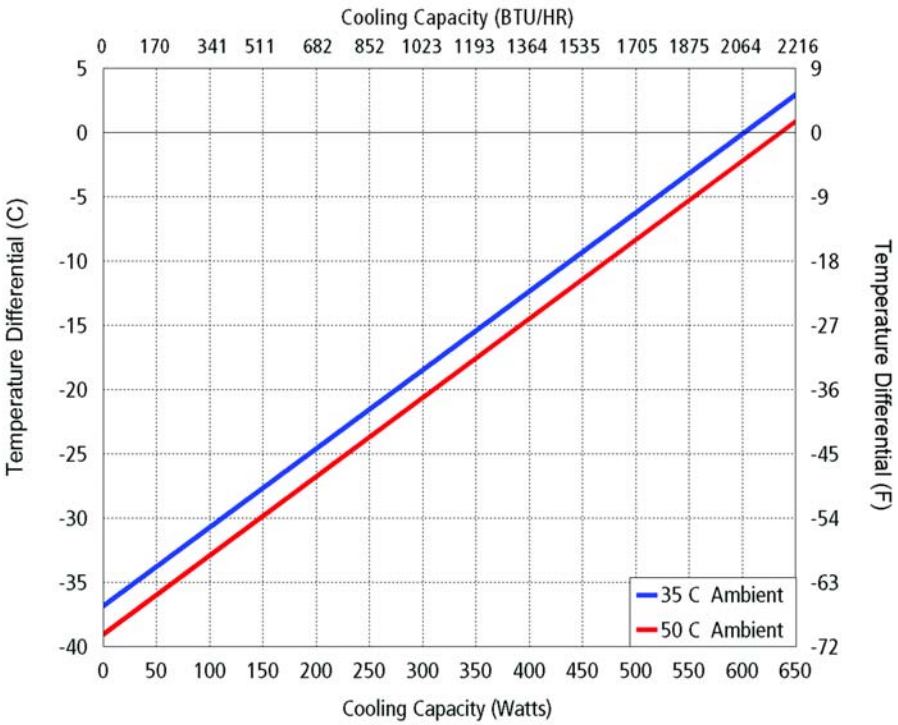

Equation of line: y=ΔT(°C) x=Capacity (Watts)		
Ambient Temp	**35°C**	**50°C**
Enclosure Air	y=.061x-36.9	y=.061x-39
Cold Sink	y=.045x-36.9	y=.045x-39

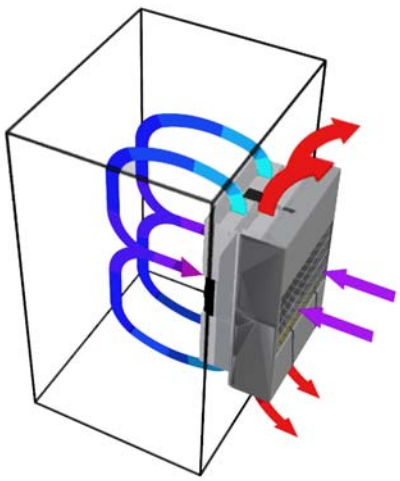

Air Flow Pattern

DIMENSIONS

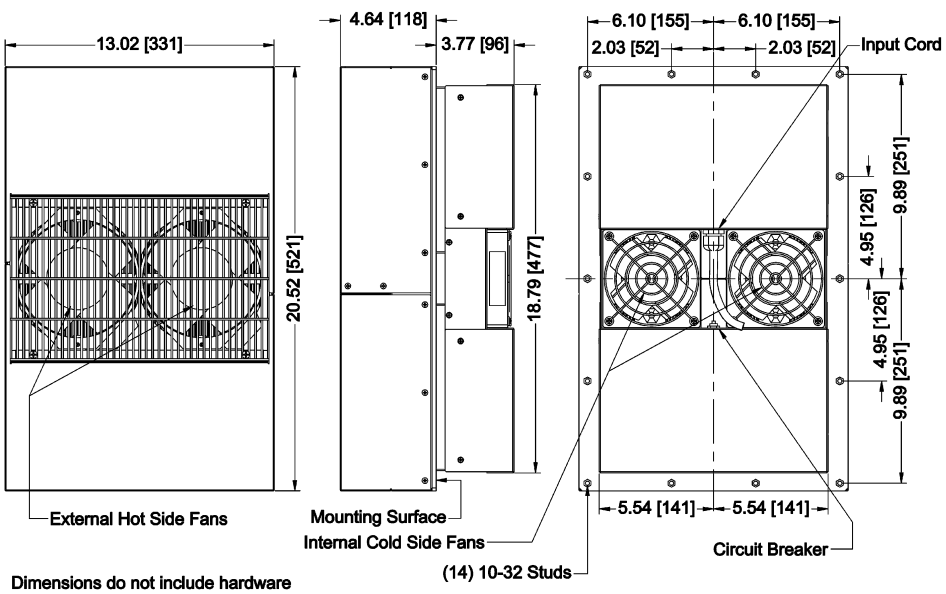

MOUNTING CUTOUT DIMENSIONS

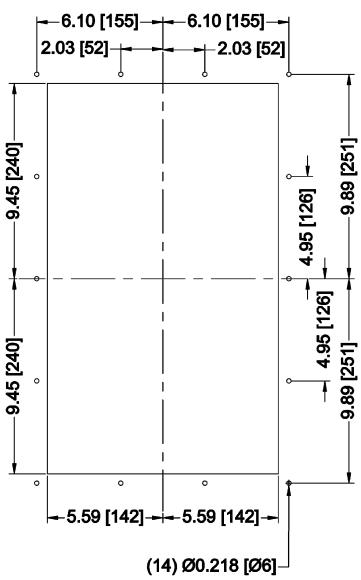

Dimensions do not include hardware
Mounting hardware and gasket included but not shown
Dimensions: Inches [Millimeters]